Color sensor (LED type)

E3MC

RGB Color Sensor Discriminates Delicate Differences in Color.

Features

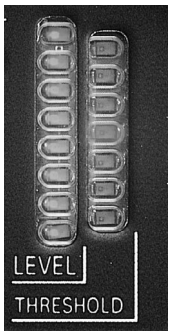

Double Indication ensuring high visibilty.

- Conformity with the registered colors can be monitored at eight levels. (Detection level indicators)
- Allows fine adjustment between fine or rough discrimination while monitoring the measured results. (Threshold level indicators)

Stable and Powerful Detection for Inline Use

Stable detection is assured with a threshold of ±10 mm for built-in amplifier type and ±4 mm for optical fiber type.
Fiber type and Stable detection ±4 mm.
Stable and Powerful Detection for Inline Use
Mounting is easy.

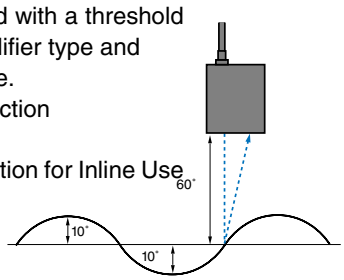

Long-distance Sensing with Built-in Amplifier Type

Built-in amplifier type with a sensing distance of 60±10 mm is available for a wide range of color discriminating applications.

Highly Resistant to Changes in Sensing Object Brightness and Ambient Temperature.

- OMRON's unique Free Angle Optics (FAO: multi-layer polarized filter) is highly resistant to changes in the tint or brightness of sensing objects. Capable of discriminating over 90 different colors.
- Wide temperature range from -20°C to 55°C and excellent detection stability.

Maintenance-free LED Light Source

Incorporates RGB LED light sources with a long service life more than several tens of thousand hours.
Great maintenance-cost saver ensuring high performance (Halogen lamps used as light sources must be replaced or re-adjusted every nine months or so.)

Principle of Detection

The E3MC detects colors by making use of the fact that the reflection ratio of a primary color (i.e. red, green or blue) reflected by an object varies with the chromatically of the object. By using a high-tech, multi-layer polarized filter called FAO (free angle optics), the E3MC emits red, green and blue light on a single optical axis. The E3MC receives the light reflected by the sensing objects through the receiver and processes the red-green-blue ratio of the light to discriminate the color of the sensing object.

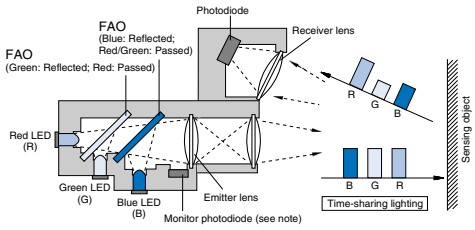

Note: The monitor photodiode compensates LED output deviation that may be caused by a temperature change. (Patent pending)

Application

Detection of a Mixture of Different Color Parts

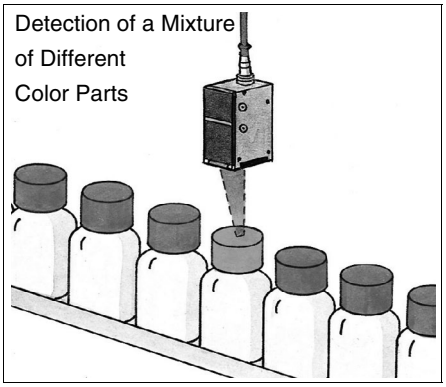

Detection of Hard-to-discriminate Marks (Yellow Marks on a White Background, etc.)

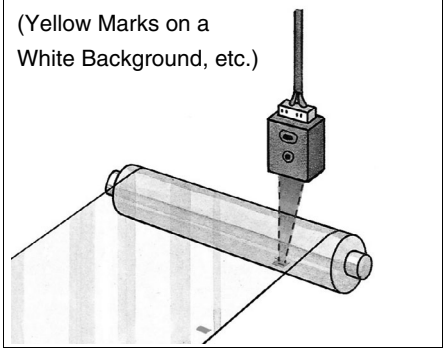

Color Discrimination and Sorting of Bottles Using a Through-beam Optical Fiber Type (E32-T17L)

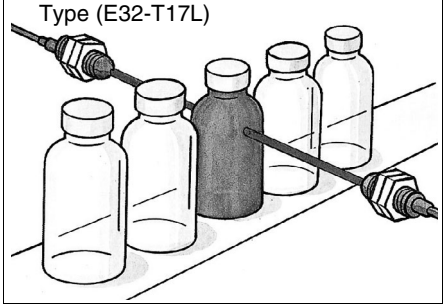

Extraction and Sorting by Color

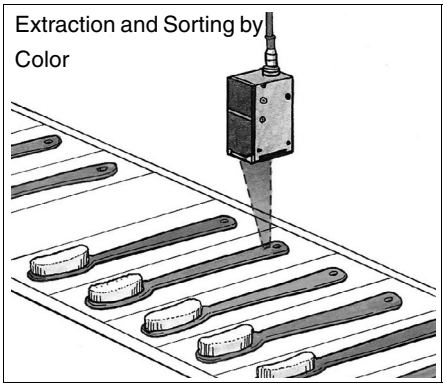

Detection of Directional Alignment for Packing

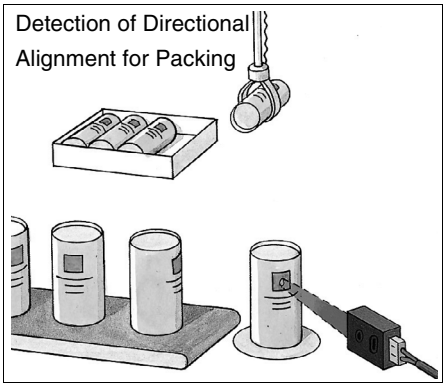

Detection of Small Marks Using a Reflective Optical Fiber Type (E32-CC200)

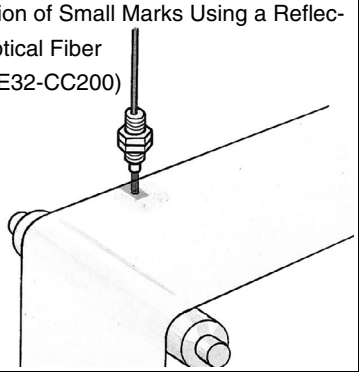

Features

Excellent Protective Structure and Maintenance Performance

The amplifier unit uses a sturdy metal body. The unit including the fiber head satisfies the water resistance of IEC Standard IP66. You can use the E3MC without any problems in a wide range of applications. In addition to this, the M12 metal connector has improved maintenance performance.

Discriminating Delicate Color Differences

The detection level indicators are lit according to the degree of conformity between registered and detected colors. Delicate color differences are discriminated by setting the threshold to a superior level. (Fine discrimination is expected.)
Sensor errors that may be caused by minor tint differences or dirt retention are prevented by setting the threshold to a lower level. (Rough discrimination is expected)

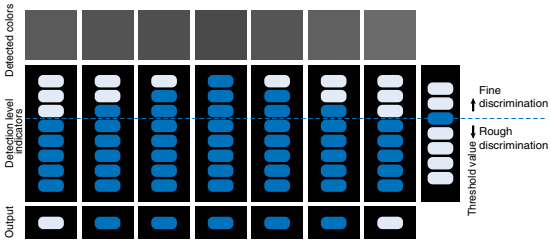

Conversion of Color Data into RGB Analog Data

The analog output type can control the color change history and distribution in analog form. Different type discrimination can also be performed without bank restrictions by CPU processing.

Color Chart

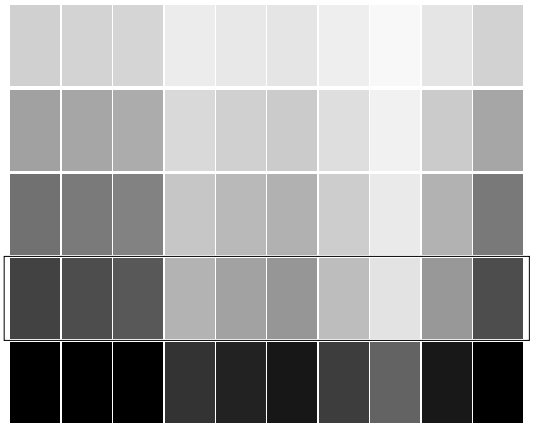

For details, refer to the standard sensing object.

Ordering Information

Sensors

ON/OFF type

Red light, Green light, Blue light

Structure	No. of outputs	Shape	Connection method	Sensing distance	Model	
					NPN output	PNP output
Built-in Amplifier Type	1		Connector type Sensor I/O connector (cable length 2 m) is supplied.	60±10mm	E3MC-A11	E3MC-A41
	4				E3MC-MA11	E3MC-MA41
Optical Fiber Type	1	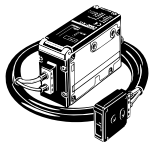		20±4mm	E3MC-X11	E3MC-X41
	4				E3MC-MX11	E3MC-MX41
General-purpose Optical Fiber Type	1			E32-CC200 5mm *	E3MC-Y11	E3MC-Y41
	4			E32-T16 200mm	E3MC-MY11	E3MC-MY41

* Distance where 11 colors of standard sensing objects can be discriminated. As a typical example, 9 colors can be discriminated when 12 mm is set. Please contact us since the sensing distance should be defined.

Analog output type

Structure	Shape	Sensing distance	Model
Built-in Amplifier Type		60±10mm	E3MC-A81
Optical Fiber Type		20±4mm	E3MC-X81
General-purpose Optical Fiber Type		Using E32-CC200 5±1mm	E3MC-Y81

Accessories (Order Separately)

Sensor I/O Connectors

Shape	Model	Quantity	Remarks
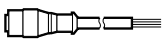	E39-C1 2M (2 m)	1 pc.	Supplied with the product.
	E39-C1 5M (5 m)	1 pc.	Please place an order when extending the cable.

Mounting Brackets

Shape	Model	Quanti-	Remarks
	E39-L114	2	For E3MC installation. (Can be inclined to 15°)
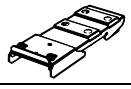	E39-L115	1	For DIN track installation.

Rating/performance

ON/OFF type

Structure / Item / Model	Built-in Amplifier Type		Optical Fiber Type		General-purpose Optical Fiber	
	E3MC -A□1	E3MC -MA□1	E3MC -X□1	E3MC -MX□1	E3MC -Y□1	E3MC -MY□1
Sensing distance	60±10 mm*1		20±4 mm		Depends on the recommended fiber. Refer to page AB- for details.	
Standard sensing object	*2					
Spot diameter	12 dia.		3-mm dia.		-	
Light source (wave length)	Red LED (680 mm), green LED (525 mm), blue LED (450 mm)					
Power supply voltage	12 to 24 VDC ±10%, ripple (p-p) : 10% max.					
Current consumption	100 mA max.					
Control output	Load supply voltage 24 VDC max., load current 100 mA max. (residual voltage NPN output: 1.2 V max., PNP output: 2.0 V max.) Open collector output type					
Color discrimination mode	Mode C: RGB ratio detection, Mode I: RGB light intensity detection Switch selectable					
Output type	Conformity output: Output is ON when the detected color coincides with the registered color. Non-conformity output: Output is ON when the detected color does not coincide with the registered color. Switch selectable					
Mode selection	E3MC-□11/-□41 Mode A (Factory-set) 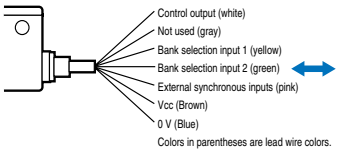 Mode B (for remote teaching) 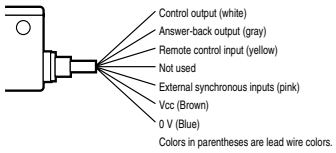 E3MC-M□11/-M□41 Mode A (Factory-set) 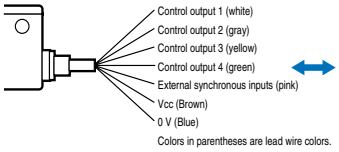 Mode B (for remote teaching) 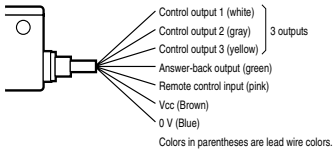 						
Remote control input (B mode only)	The following control is performed according to the control signal input. E3MC-□11/-□41□ Bank selection, remote teaching, or threshold selection E3MC-M□11/-M□41□ channel selection, remote teaching, threshold changing					
Answer-back output (B mode only)	Load current: 100 mA max. NPN open collector output with a residual voltage of 1.2 V max. PNP open collector output with residual voltage 2.0 V max. (E3MC-(M)A41/-(M)X41/-(M)Y41)					
Bank selection input (1 output only)	Selected between 4 banks (switching with the bank selection input and select button) Bank selection input response time: 50 ms max.					
External synchronous input	Response time: 1 ms max. (Note that the 4 output type cannot be used when the B mode is selected)					
Protective circuits	Protection from load short-circuit and reversed power supply connection					
Response time	1 output type: Standard mode: 3 ms max., high-speed mode: 1 ms max. (switch selectable) 4 output type: Standard mode: 6 ms max., high-speed mode: 2 ms max. (switch selectable)					
Discriminating color registration	4 colors can be registered, teaching system (threshold permits fine adjustment)					
Timer function	OFF delay fixed at40 ms (ON/OFF switch selectable)					
Ambient illuminance	Incandescent lamp: 3,000 lux max. Sunlight 10,000 lux max.					
Ambient temperature	Operating: -20 to 55°C, Storage: -30 to 70°C (with no icing)					
Ambient humidity	Operating: 35% to 85% RH, Storage: 35% to 95% RH (with no icing or condensation)					
Permissible fiber bending radius	-		10 mm min.		Varies with the type of recommended fiber	
Insulation resistance	20 M min. at 500 VDC					
Dielectric strength	1,000 VAC at 50/60 Hz for 1 minute					
Vibration (resistance) *3	Destruction: 10 to 55 Hz, 1.0 mm double amplitude or 150 m/s^2 for 2 hrs each in X, Y, and Z directions					
Shock (resistance) *4	Destruction: 500 m/s^2 for 3 times each in X, Y, and Z directions					
Protective structure	IEC 60529 IP66 (with Protective Cover attached)					
Connection method	Connector type [sensor I/O connector (cable length 2 m)]					

Item / Structure		Built-in Amplifier Type		Optical Fiber Type		General-purpose Optical Fiber	
Model		E3MC -A□1	E3MC -MA□1	E3MC -X□1	E3MC -MX□1	E3MC -Y□1	E3MC -MY□1
Weight (Packed state)		Approx. 350 g		Approx. 400 g		Approx. 350 g	
Material	Case	Zinc die-cast					
	Operation panel cover	PES					
	Fiber head	-		ABS		-	
Accessories		Cross-shaped recess screw M5x6 (with spring washer), sensor I/O connector (cable length 2 m), instruction manual					

*1. C mode, standard mode (response time), threshold: Distance range where 11 colors of standard sensing objects can be discriminated when = 15° (E3MC-(M) A□□) or = 10° (E3MC-(M) X□□) in the following figure in the standard mode.

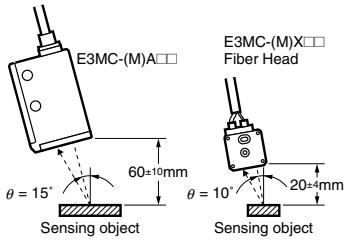

*2. Standard Sensing Objects

Color (11 standard colors)	Munsell color notation
White	N9.5
Red	4R 4.5/12.0
Yellow/ red	4YR 6.0/11.5
Yellow	5Y 8.5/11.0
Yellow/ green	3GY 6.5/10.0
Green	3G 6.5/9.0
Blue/ green	5BG 4.5/10.0
Blue	3PB 5.0/10.0
Blue/ purple	9PB 5.0/10.0
Purple	7P 5.0/10.0
Red/ purple	6RP 4.5/12.5

*3. 0.75-mm double amplitude or 100 m/s^2 when using a mounting bracket
*4. 300 m/s^2 when using a mounting bracket

Rating/Performance

Analog output type

Structure / Item / Model		Built-in Amplifier Type	Optical Fiber Type	General-purpose Optical Fiber Type
		E3MC-A81	E3MC-X81	E3MC-Y81
Sensing distance *1		60±10 mm	20±4 mm	5 ±1mm (When using the E32-CC200)
Spot diameter		12 dia.	3-mm dia.	Varies with the recommended fiber.
Light source (wave length)		Red LED (680 mm), green LED (525 mm), blue LED (450 mm)		
Power supply voltage		24 V DC ±10%, ripple (p-p) 10% or less		
Power consumption		100 mA max.		
Control output		3 analog independent outputs (RGB) 0 to 10 VDC without output short-circuit protection		
	Resolution	300 mV max.		
	Load current	5 mA max.		
	Response speed	1.7 ms max.		
	Temperature drift	±0.3% FS/°C max.		
	Power restoration time	100 ms max. after power-on		
Calibration input A, B		24 VDC		
	Signal	1 ms (24 VDC, HIGH active)		
	Response time	600 ms max.		
	Calibration value	Terminal A: 10±0.2V		Terminal B: 7±0.2V
Protective circuits		Reverse polarity protection		
Ambient illuminance		Incandescent lamp: Illumination on optical spot: 1,000 lux max.		
Ambient temperature		Operating: 0°C to 50°C, Storage: -30°C to 70°C (with no icing or condensation)		
Ambient humidity		Operating: 35% to 85%RH, Storage: 35% to 95%RH (with no condensation)		
Permissible fiber bending radius		---	10 mm min.	Varies with the type of recommended fiber
Insulation resistance		20 M min. at 500 VDC		
Dielectric strength		1,000 VAC at 50/60 Hz for 1 minute		
Vibration (resistance) *2		Destruction: 10 to 55 Hz, 1.0 mm double amplitude or 150 m/s^2 for 2 hrs each in X, Y, and Z directions		
Shock (resistance) *3		Destruction: 500 m/s^2 for 3 times each in X, Y, and Z directions		
Protective structure		IEC 60529 IP66 (with Protective Cover attached)		
Connection method		M12 dedicated connector type		
Weight (Packed state)		Approx. 300 g	Approx. 350 g	Approx. 300 g
Material	Case	Zinc die-cast		
	Cover	PES		
	Fiber head	ABS		
Accessories		Connection cable 2 m (E39-C1), instruction manual		

*1. Distance range where calibration can be made with standard white paper (N9.5).
*2. 0.75 mm double amplitude or 100 m/s^2 when using a mounting bracket
*3. 300 m/s^2 when using a mounting bracket

Use (Typical)

Detection of work color

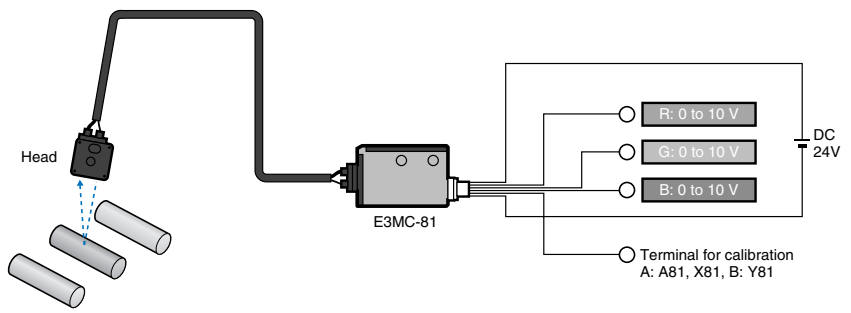

Output Circuit Diagram

NPN model

E3MC-□11 (1 output type)

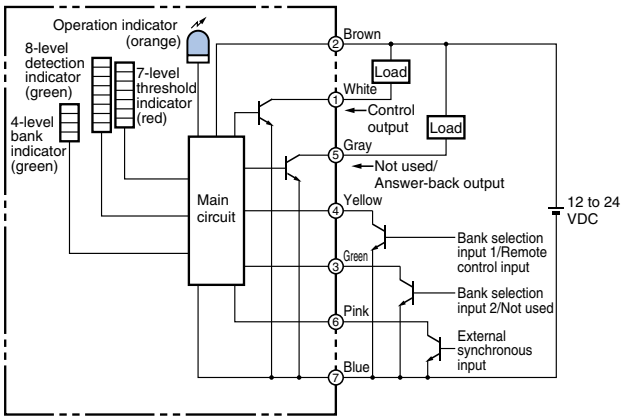

E3MC-M□11 (4 output type)

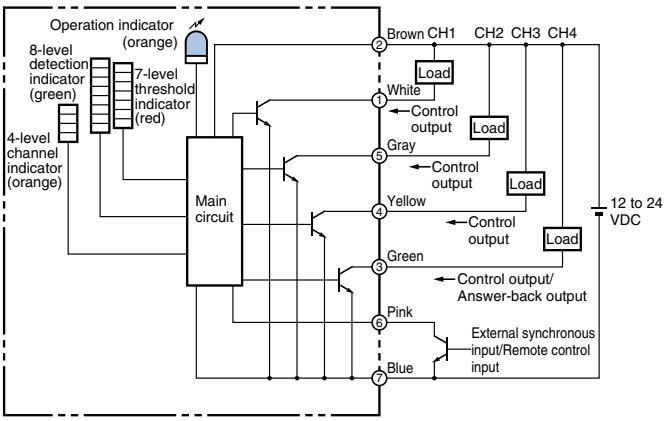

PNP type

E3MC-□41 (1 output type)

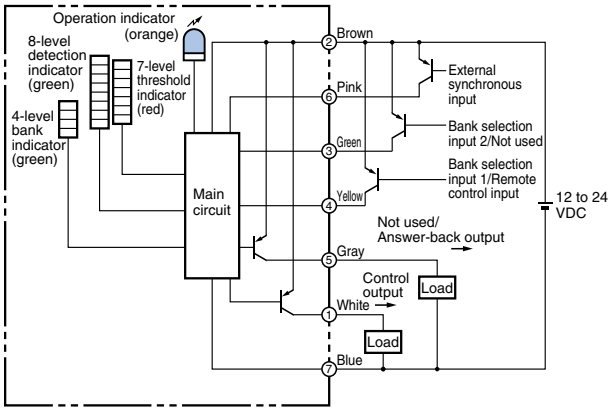

E3MC-M□41 (4 output type)

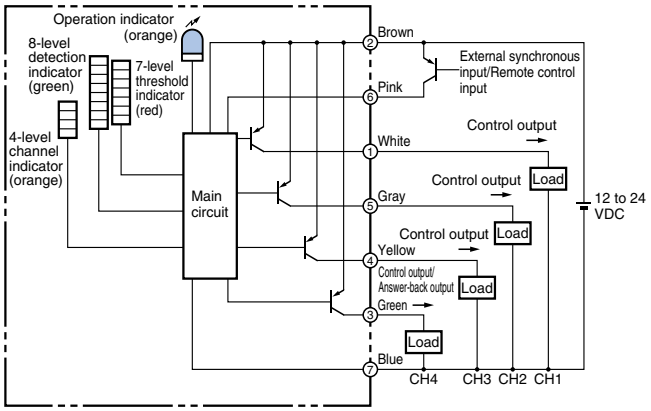

Analog output type

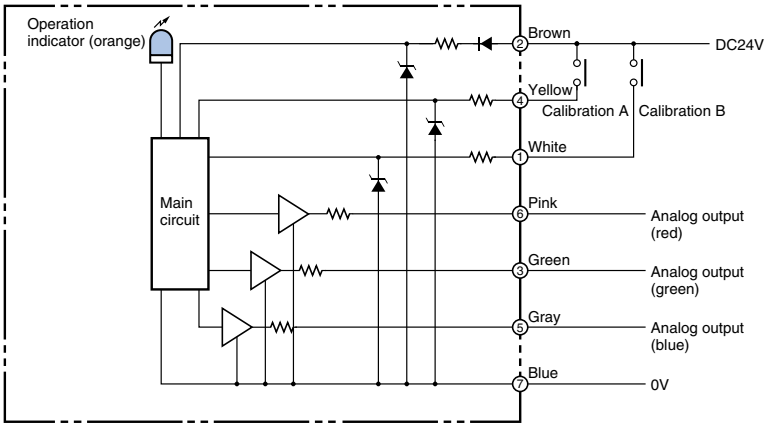

Connector Pin Arrangement

Note: Pin 8 in not used.

Timing chart

ON/OFF type

Function Switch Color Conformity Selection	Output transistor Status	Timing chart
= (Upper side)	ON when colors coincide	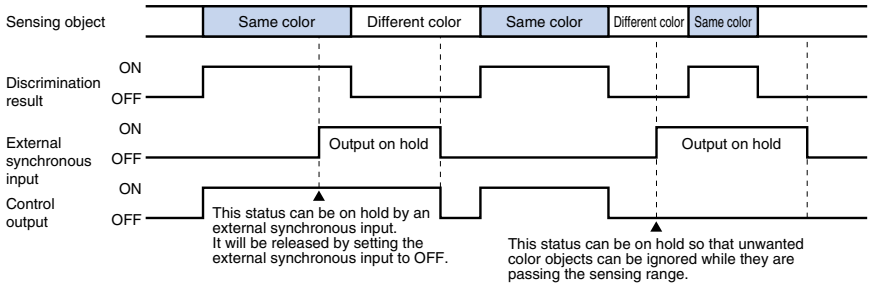
≠ (Lower side)	ON when colors do not coincide	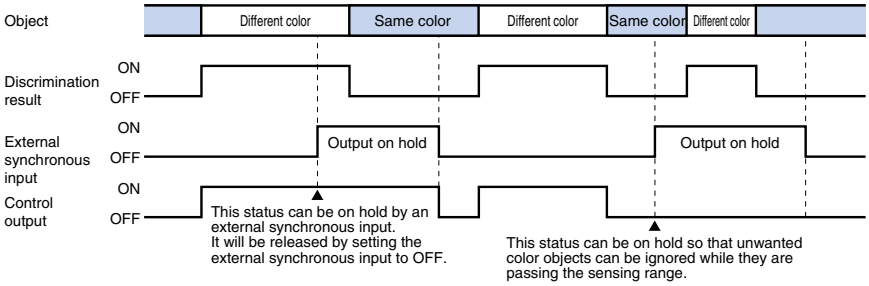

Connectors (Sensor I/O connectors)

Model	Internal Wiring	Pin No.	Wire color	ON/OFF type A mode		Analog output
				E3MC-□11, E3MC-□41	E3MC-M□11, E3MC-M□41	E3MC-□81
E39-C1 2M (2 m) E39-C1 5M (5 m)	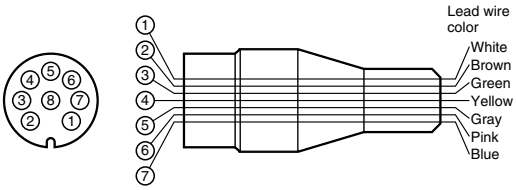 Note: Pin 8 in not used.	①	White	Output	Output 1	Calibration B
		②	Brown	Power supply (+V)	Power supply (+V)	Power supply (+V)
		③	Green	Bank selection input 2	Output 4	Analog output G (green)
		④	Yellow	Bank selection input 1	Output 3	Calibration A
		5	Gray	-	Output 2	Analog output B (blue)
		6	Pink	External synchronous input	External synchronous input	Analog output R (red)
		7	Blue	Power supply (0 V)	Power supply (0 V)	Power supply (0 V)

Part Names/Functions

ON/OFF type

E3MC-A□□ (1 output Models)
E3MC-X□□ (1 output Models)
E3MC-Y□□ (1 output Models)
E3MC-MA□□ (4 output Models)
E3MC-MX□□ (4 output Models)
E3MC-MY□□ (4 output Models)

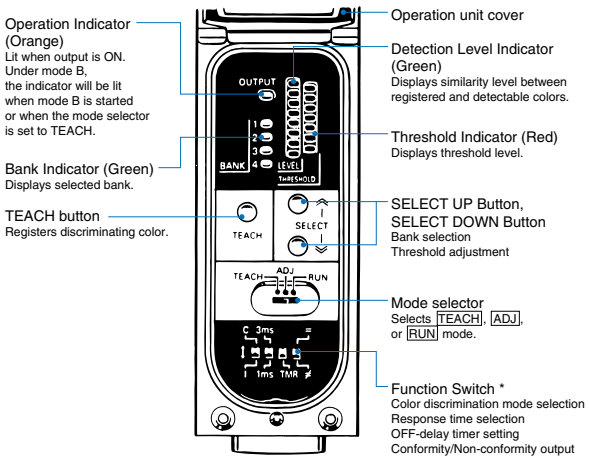

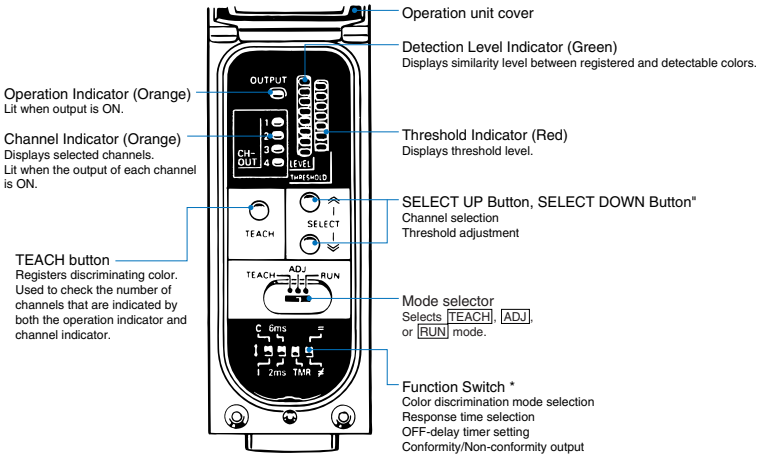

* Function Switches (Setting of various functions)

The following settings can be made with the function switches. (Settings can be made in the RUN mode or ADJ mode.)
(For the 4 output type, all channels are the target of settings.)

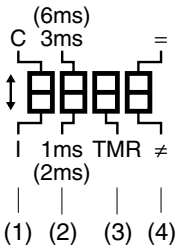

① Color Discrimination Mode Selection (Mode C is recommended for normal applications.)

- Mode C: Color discrimination is performed according to R (red), G (green), and B (blue) ratio of the reflection light even if the sensing objects fluctuate up and down within the rated sensing range.
- I (Mode I): Color discrimination is performed according to the light intensity. This mode ensures a finer color (similar colors or neutral color such as white, gray or black) discrimination than mode C.

2. Response Time Selection (Note: Figures in parentheses are for the 4 output models.)

- 3 ms (6 ms): E3MC provides a stable detection of minute differences of color. Set the response time to
  3 ms for usual applications.
- 1 ms (2 ms): E3MC will be in quick-response operation. Set the response time to 1 ms if high-speed response is required.

3. OFF-delay Timer Setting

- No indication: No timer setting
- TMR: A 40 ms OFF delay timer is set for control output.

4. Conformity/Non-conformity Output

- =: Output is ON when the detected color coincides with the registered color.
- : Output is ON when the detected color does not coincide with the registered color.

Note: Each pin of the function switch is factory-set to the upper position.

Analog output type

Power indicator only

Operation

ON/OFF type

Setting Procedure

1-output Models (E3MC-A□□/E3MC-X□□/E3MC-Y□□)

1. Bank Selection

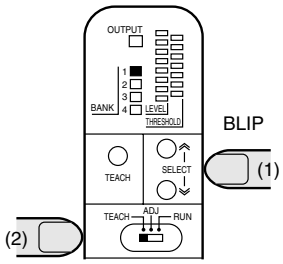

Set the Mode Selector to the TEACH mode and then select the BANK using the SELECT button.

2. Color Registration

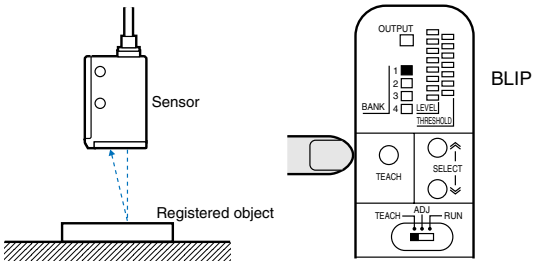

Locate the registered object at the detection point and press the TEACH button.

OK

No Good

If color registration has not been completed, all red threshold indicators (red) flicker.

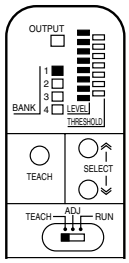

All detection level indicators (green) turn ON. At this time, the threshold is set to 4.

3. Threshold Adjustment (If Required)

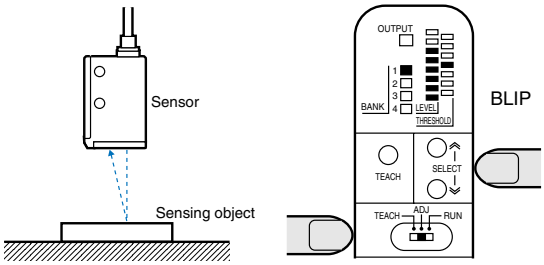

Place the sensing object, press the SELECT button in the ADJ mode, and make adjustment. (Adjustment can be made without a sensing object.) The bank selected in the ADJ mode is the bank selected in the TEACH or RUN mode.

Operation

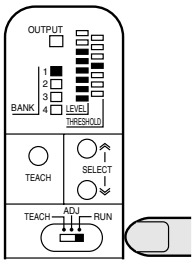

Make measurement in the RUN mode. The registered color can be selected with bank selection input.

Detection Level and Tolerance

As the detected color becomes closer to the registered color (colors look alike), the number of lit detection level indicators (green) increase. The control output will turn ON if the detection level (green) exceeds the threshold level (red) and turn OFF if the detection level does not exceed the threshold level. (For conformity output setting) Set the threshold to a higher level for highly-precise color discrimination or to a lower level to allow margins for discriminated colors (ignore minor tint differences, dirt retention or like).

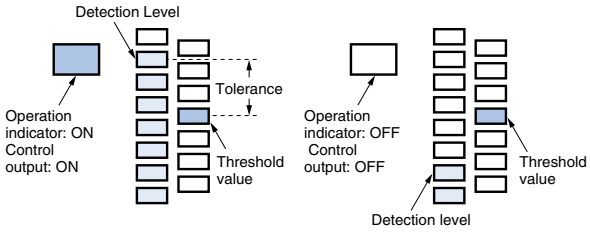

4 output Models (E3MC-MA□□/E3MC-MX□□/E3MC-MY□□)

1. Channel Selection

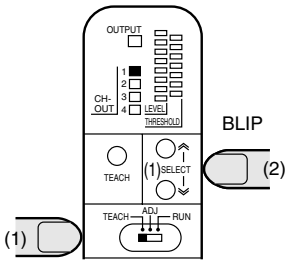

Set the Mode Selector to the TEACH mode and then select the channel using the SELECT button.

2. Color Registration

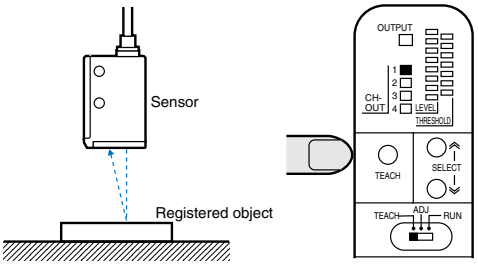

Locate the registered object at the detection point and press the TEACH button.

OK →

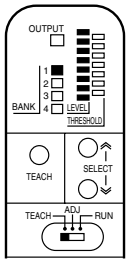

All detection level indicators (green) turn ON.
The threshold is set to 4.

Not Good →

If color registration has not been completed, all red threshold indicators (red) flicker.

3. Threshold Adjustment (If Required)

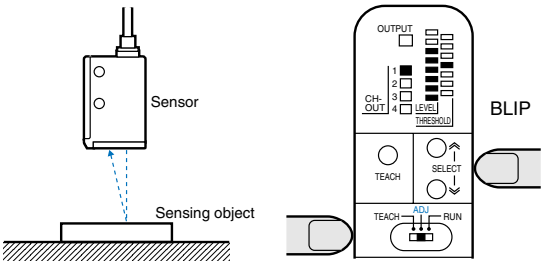

ADJ

(Adjustment can be made without a sensing object)
The bank selected in the ADJ mode or TEACH mode will become the bank for the RUN mode.

Detection Level and Tolerance

As the detected color becomes closer to the registered color (similar colors), the number of lit detection level indicators (green) increase. The control output will turn ON if the detection level (green) exceeds the threshold level (red) and turn OFF if the detection level does not exceed the threshold level. (For conformity output setting) Set the threshold to a higher level for highly-precise color discrimination or to a lower level to allow margins for discriminated colors (ignore minor tint differences, dirt retention or like).

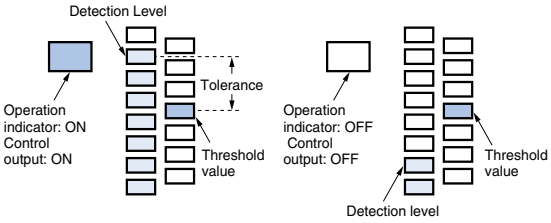

peration

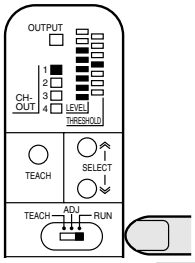

Detection is made in the RUN mode. The output ON/OFF status of each channel is displayed on the channel indicators. Double-displayed channels can be checked and selected by pressing the button.

For indicating detection level and threshold value for other channels

Press the SELECT button.

For checking which channel is indicated

Press the TEACH button

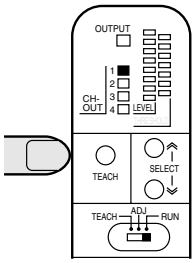

Displays the channel the detection level of which is currently indicated in (CH-OUT). (For three seconds)

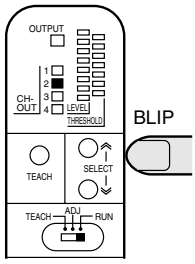

Displays the selected channel in (CH-OUT) (for three seconds) and indicates the detection level and threshold value of the selected channel.

Registered Color Selection (Bank Selection Input)

1-output Models Only

In the RUN mode, bank selection can be made externally with the bank selection input 1 (yellow) and input 2 (green). The selected bank is indicated by the bank selection indicator.

NPN (E3MC-A11/-X11/-Y11)

Bank	Input 1	Input 2
1	OPEN	OPEN
2	GND	OPEN
3	OPEN	GND
4	GND	GND

PNP (E3MC-A41/-X41/-Y41)

Bank	Input 1	Input 2
1	OPEN	OPEN
2	Vcc	OPEN
3	OPEN	Vcc
4	Vcc	Vcc

External synchronous input function

The measurement results will be directly output to the control output if the input from the external synchronous input terminal (pink) is set to OFF. The output will hold the previous status if the input of the external synchronous input terminal is set to ON. External synchronous input is valid in RUN or ADJ mode. As for the 4-output models, this function applies to the output of all the channels.

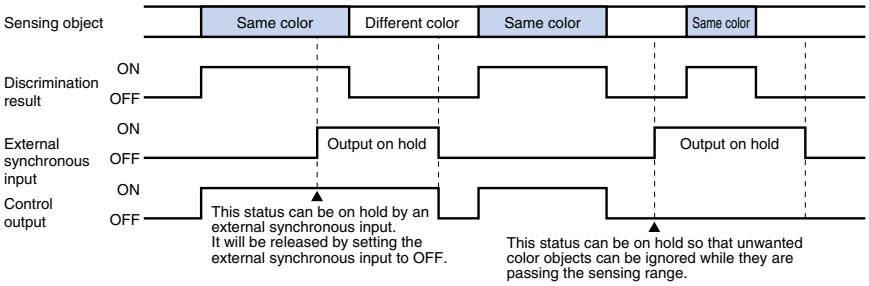

Remote teaching (remote control function)

Mode Setting

When using remote teaching (remote control function), you must set the Sensor to mode B.

Setting Method

Apply power to the Sensor while pressing the SELECT DOWN button and TEACH button at the same time.

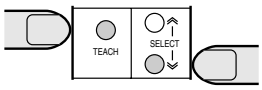

Checking Method

Whether the E3MC is operating in mode A or B can be checked with the operation indicator after mode setting (indicated for 3 s) or in the TEACH mode.

Mode A: Operation indicator is OFF.

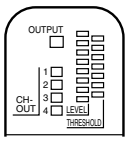

Mode B: Operation indicator is ON.

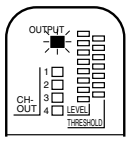

Note: 1 . The Sensor is set to mode A before shipment.
2 . The current mode selected does not change after the Sensor is turned OFF.
3 . The remote control function is available in the RUN mode or ADJ mode only.
4 . When mode B is selected, the E3MC-M□ has three outputs. In addition to this, the external synchronous input function is unusable.
5 . The same switching procedure can be used for changing to mode A.

Remote Teaching Method

1 Remote teaching with manual input through a mechanical switch

Short-circuit the remote control input for 1.5 s or more to either of the following terminals according to the E3MC model.

NPN type (E3MC-□□11)	Connected to GND (blue)
PNP type (E3MC-□□41)	Short-circuit to Vcc (Brown) terminal.

2 Remote control of teaching and bank selection through the PLC or PT

Input one of the following signals as a remote control input. Only when the signal is accepted properly, an answer-back output is provided for 0.3 s .

No.	Control signal	E3MC-□	E3MC-M□□
1	ON / OFF 0.3s	Bank 1 selected.	Channel 1 selected.
2	ON / OFF 0.6s	Bank 2 selected.	Channel 2 selected.
3	ON / OFF 0.9s	Bank 3 selected.	Channel 3 selected.
4	ON / OFF 1.2s	Bank 4 selected.	Not used.
5	ON / OFF 1.5s	To the selected bank Teaching	To the selected channel Teaching

The following is an example of ladder programming.

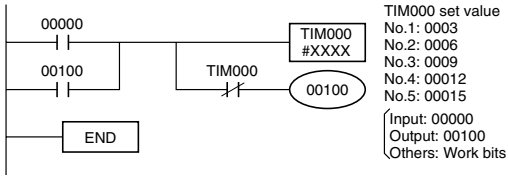

The following is an example of a timing chart of teaching after bank selection.

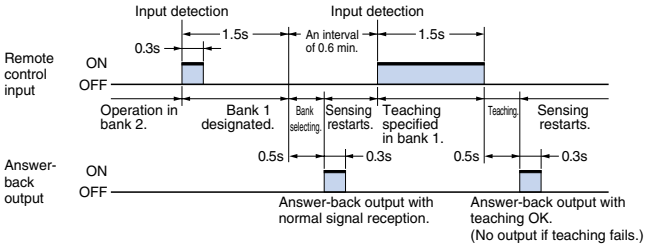

3 Remote control of threshold adjustments through the PLC or PT

Input one of the following signals as a remote control input. Only when the signal is accepted properly, the threshold is changed and an answer-back output is provided for 0.3 s .

No.	Control signal	All E3MC models
6	ON / OFF 0.3s 0.3s 0.3s	Threshold 1 selected.
7	ON / OFF 0.3s 0.6s 0.3s	Threshold 2 selected.
8	ON / OFF 0.3s 0.9s 0.3s	Threshold 3 selected.
9	ON / OFF 0.3s 0.3s 0.6s	Threshold 4 selected.
10	ON / OFF 0.3s 0.6s 0.6s	Threshold 5 selected.
11	ON / OFF 0.3s 0.3s 0.9s	Threshold 6 selected.
12	ON / OFF 0.6s 0.3s 0.3s	Threshold 7 selected.

Threshold level and indication

The following is an example of ladder programming for setting control signals. Full control of the E3MC is possible using this function together with function 2.

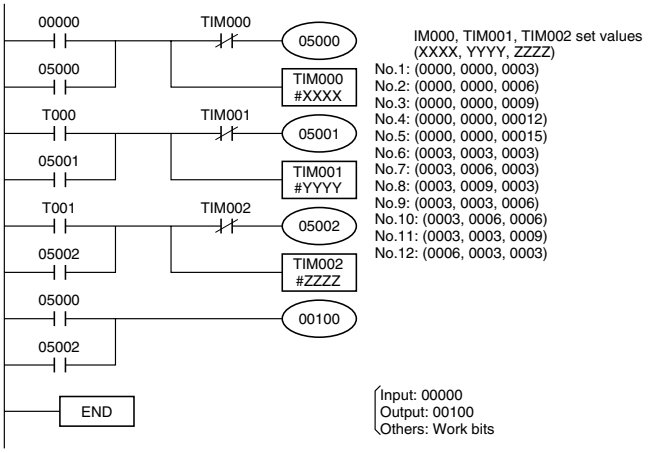

Note: 1 . The admissible error of each signal pulse is ±0.1 s max.
2 . A minimum interval of 0.6 s is required between signals.
3 . Threshold 4 is set after teaching.

Analog output type

Setting Procedure for Setting the E3MC-MA□81

Mounting	Output Circuit Diagram	Power-on	Calibration	Detection start	Other Accessories

Start detection after making setting in order of the above.

Calibration

This sensor has a calibration function that sets the output voltages of RGB to the same value using the standard white. For the A and X types, use the No. 4 terminal (yellow) to set the output values to 10 V. For the Y type, use the No. 1 terminal (white) to set them to 7 V.

① Set the standard white to the detection position.
② Input a 24V 1 ms or more signal to the calibration terminal.
③ It takes about 600 ms to make calibration.
④ Check the RGB outputs.
⑤ Remove the standard white and start detection.

Precautions

- If the color used for calibration operation is other than white-based colors, the operation is canceled to return to the previous status since the outputs cannot be set to the same value.
- Note that if the No. 1 terminal (white) is used to perform the calibration operation of the A or X type, the output values are set to 7 V and its capability cannot be exhibited fully.
- If the No. 4 terminal (yellow) is used to perform the calibration operation of the Y type, the operation will be insufficient since output compensation cannot be made. Therefore, always use the No. 1 terminal (white).

Precautions

Correct Use

Common to E3MC series

Design

Power Reset Time

E3MC is ready to sense an object in 100 ms after power-on. Therefore, use the devices connected to E3MC 100 ms after power-on. If the load and E3MC are connected to different power supplies, always power on E3MC first. Especially for fine detection after power-on, warm up the system for about 15 minutes.

Power OFF

The E3MC may output a single pulse when the control power supply is turned OFF. If E3MC is connected to a timer or counter to which power is supplied from an independent power supply, E3MC will be more likely to output a single pulse when the control power supply is turned OFF. Therefore, supply power to the timer or counter from the same power supply for the E3MC.

Technical Guide

Detection of Metal or Glossy Objects

The color detection capability will be improved by changing the mounting angle of the Sensor so that regularly reflected light will not enter. The mounting angle of the E3MC-(M)X□□ can be adjusted about 10° with its mounting holes.

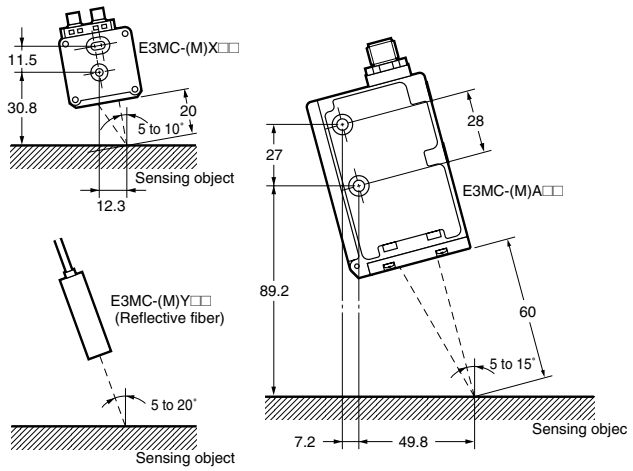

On the other hand, sensing objects such as metal or transparent plastic cases may be detected by allowing regular reflection.

Detection of White, Gray or Black Objects

When registering white, gray, black or other neutral-color objects, change the color discrimination mode to the Mode 1 mode to achieve a more stable intensity discrimination.

External Light

The E3MC may malfunction if it directly receives external light interference. Provide a cover to shut-out such external light interference.

Adjustment of Sensing Distance of General-purpose Optical Fiber Type

Unlike the E3MC-A or E3MC-X, the E3MC-Y may require adjustment of its sensing distance depending on the reflection rate. This also applies to the through-beam type.

Bring the fiber head as close as possible to the object and conduct teaching.

OK	No
(All detection level indicators (green) turn ON)	(All threshold indicators (red) flicker)
Actually pass an object to check whether it can be detected or not.	Excessive light. Move the head away from the object and find a position where teaching is accepted. The distance slightly away from this position is the optimum distance. Move the head away by approximately 20% of the sensing distance.

DIN Track Mounting/Removal with the E39-L115

Mounting

1. Attach the E39-L115 Mounting Bracket to the E3MC with four M5 screws.

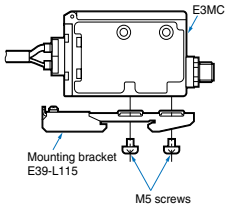

2. When mounting the E3MC to the DIN track, loosen the M3 screw of the Mounting Bracket and slide part A in the direction indicated by arrow ①.

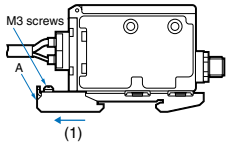

3. Mount part (2) to the DIN track.

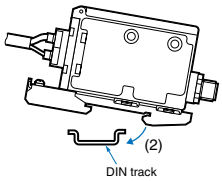

4. Press the E3MC in the direction indicated by arrow ③ and slide part A in the direction indicated by arrow ④ until the Mounting Bracket correctly engages with the DIN track.

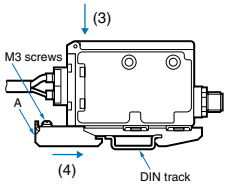

5. Tighten the M3 screw of the Mounting Bracket to secure the Mounting Bracket.

(Dismantling)

Loosen the M3 screw of the E39-L115, press the E3MC in the direction indicated by arrow (5) and slide part A in the direction indicated by arrow (6). Then lift up the E3MC in the direction indicated by arrow (7) to remove the E3MC with the E39-L115.

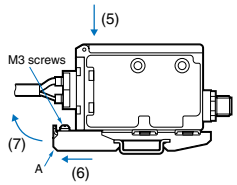

Others

EEPROM Error

If a write error occurs (the buzzer beeps and the operation indicator and bank indicator flicker) due to power-off, static electricity or other noise during write to EEPROM, perform teaching or threshold level setting again.

Protective Cover

Tighten the operation cover to a torque of 0.2 to 0.3 Nm to ensure proper waterproofing.

Built-in Amplifier Type

installation

Tightening Force

For case installation, tighten it to the torque of 2.3 Nm max.

Sensor isntallation

This Sensor does not have the mutual interference prevention. When performing precision detection, use the Sensor with a cover for protection against disturbance light to ensure that the beams of incandescent and fluorescent lamps do not enter the fiber head and lens surface directly.

Optical Fiber Type

Installation

Tightening Force

For head installation, tighten it to the torque of 0.54 Nm max.

Handling the Fiber Unit

- Do not pull or press the Fiber Unit.
- The bending radius of the fiber should be not less than the admissible bending radius given in Ratings/performance.
- Do not bend the fiber within 20 mm from the head or amplifier coupling portion.

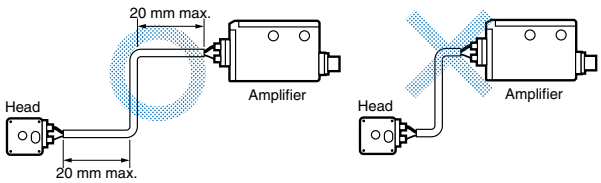

- Do not give compression or load.

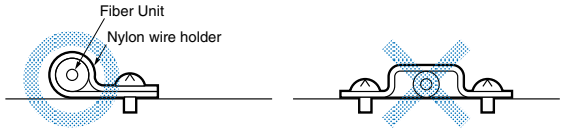

- The Fiber Head could be break by excessive vibration. To prevent this, the following is effective:

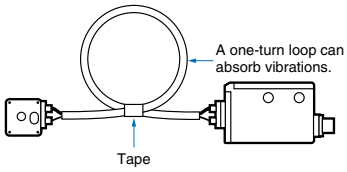

General-purpose Optical Fiber Type

Design

Definition of Sensing Distance of a Reflective Fiber

- The sensing distance of reflective fiber is the sensing distance of the Sensor located obliquely to the sensing object as shown in the following illustration.
- Set to C mode and standard mode (response time), and threshold set to the standard level with an inclination angle of 20 degrees

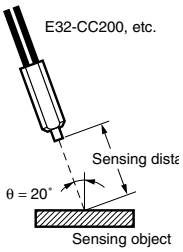

Recommended Fiber: Reflective Optical Fiber

The following optical fibers are recommended for use with the E3MC-(M)Y□□.

Model	Sensing distance*1
E32-DC200	5 mm
E32-CC200*2	5 mm
E32-D32L*3	4.5 mm
E32-D11L	5 mm

*1. Distance where 11 colors of standard sensing objects can be discriminated. As a typical example, 9 colors can be discriminated when 12 mm is set.
*2. The fiber to be inserted into the emitter is indicated with white lines. Insert the amplifier fiber into the lower emitter section.
*3. The fiber to be inserted into the emitter is indicated with dotted yellow lines. Insert the amplifier fiber into the lower emitter section.

Recommended Fiber: Through-beam Fiber

The following optical fibers are recommended for use with the E3MC-(M)Y□□.

Model	Sensing distance
E32-TC200	30 mm
E32-T11L	60 mm
E32-T16	200 mm
E32-T17L	1.1 m

* Distance where red, yellow and blue films can be discriminated stable.

Mounting

Insertion

The inserted Fiber Unit comes in contact with the internal rubber packing first. Insert the Fiber Unit further unit it comes in contact with the innermost end.

Sensor installation

Tighten the Fiber Unit with a screwdriver to a torque of 0.2 Nm.

Fibers

Among the recommended fibers, the E32-CC200 and E32-D32L have white or dotted yellow lines on the fiber to be inserted into the emitter. When using the E3MC-(M)Y□□, insert the fiber with the line into the emitter section at the bottom of the amp.

Common to Fiber Units

Mounting

Tightening Force

- The tightening force applied to the Fiber Unit should be as follows:

(Screwed type) (Columnar type)

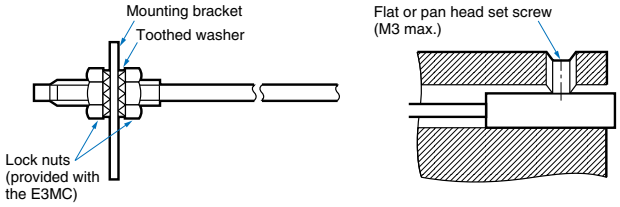

Fiber Units	Clamping torque
M3/M4 screw	0.78 Nm max.
M6 screw	0.98 Nm max.
2-dia. column	0.29 Nm max.
3-dia. column	0.29 Nm max.
E32-T16	0.49 Nm max.

- Use a proper-sized wrench.

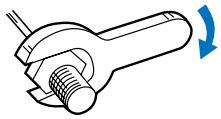

Cutting Fiber

- Insert a fiber into the Fiber Cutter and determine the length of the fiber to be cut.
- Press down the Fiber Cutter in a single stroke to cut the fiber.

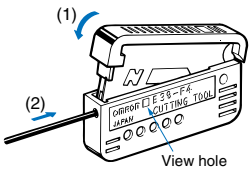

- The cutting holes cannot be used twice. If the same hole is used twice, the cutting face of the fiber will be rough and the sensing distance will be reduced. Always use an unused hole.

Connection

- Do not pull the Fiber Unit with force exceeding 9.8 N or press the Fiber Unit with force exceeding 29.4 N. The fiber is so thin that the utmost attention will be required to handle the fiber.
- Do not bend the end of the Fiber Unit.

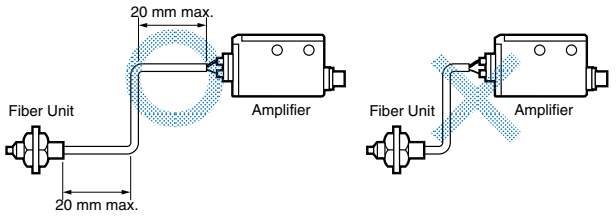

- Do not apply excess force on the Fiber Units.

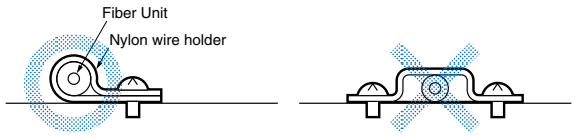

- The Fiber Head could break by excessive vibration. To prevent this, the following is effective:

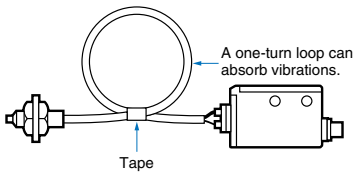

Dimensions (Unit: mm)

Sensors

E3MC-A□□
E3MC-MA□□
E3MC-A81

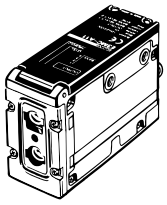

E3MC-A11

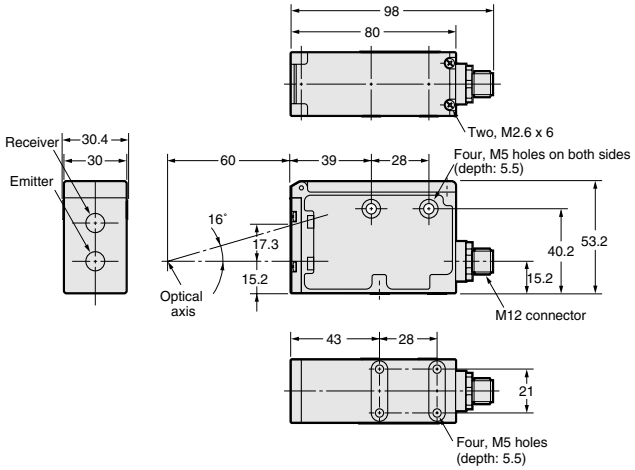

Mounting Dimensions
Side Mounting

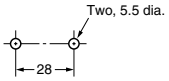

Bottom Mounting

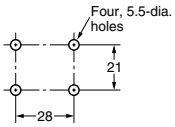

E3MC-X□□
E3MC-MX□□
E3MC-X81

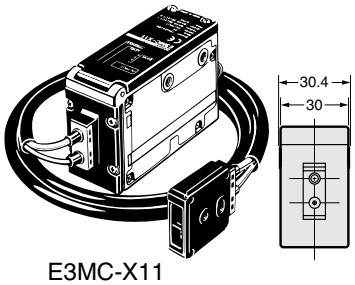

E3MC-X11

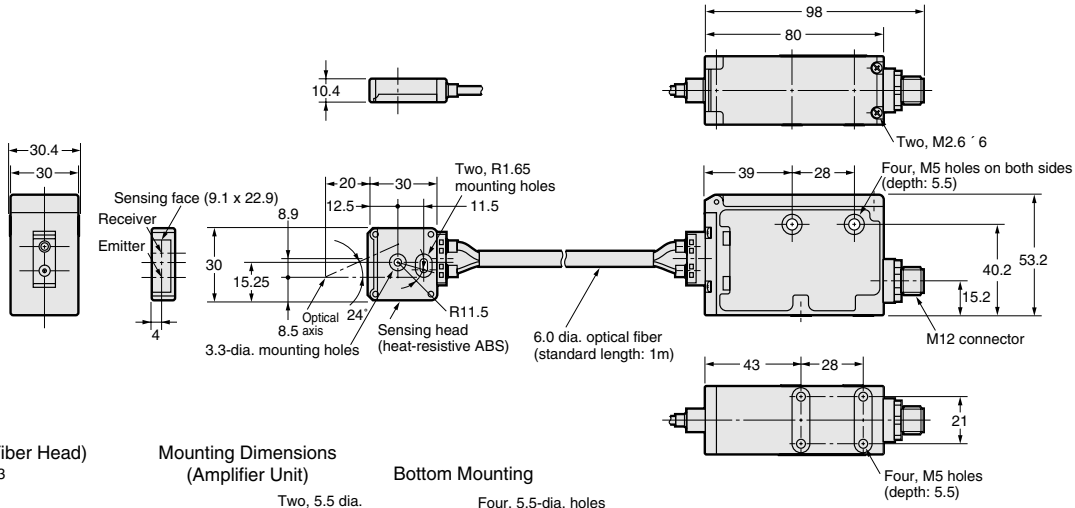

Mounting Dimensions (Fiber Head)

Mounting Dimensions
(Amplifier Unit)

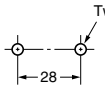

Bottom Mounting

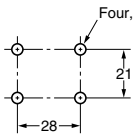

E3MC-Y□□
E3MC-MY□□
E3MC-Y81

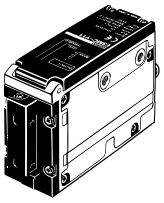

E3MC-Y11

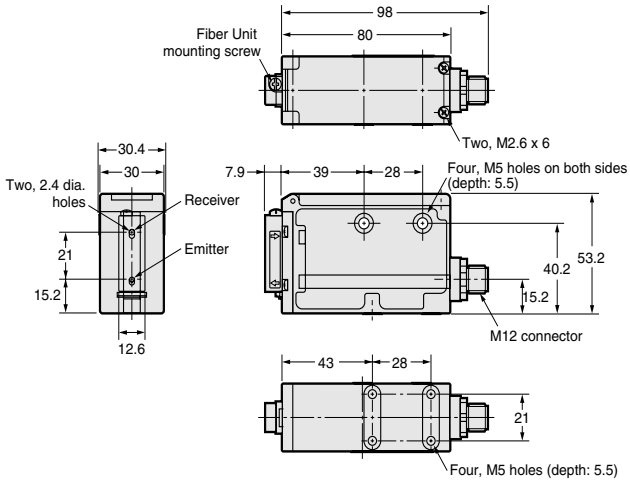

Mounting Dimensions
Side Mounting

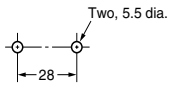

Bottom Mounting

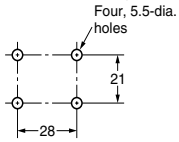

Fiber Units

Accessories (Order Separately)

Sensor I/O Connectors

E39-C1 2M (included)
E39-C1 5M

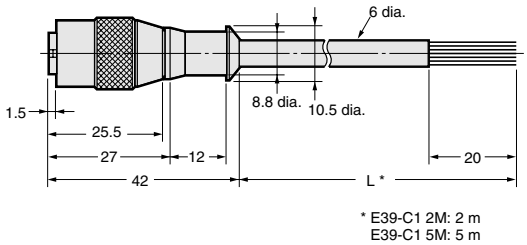

* Attached to the product.

Mounting Brackets

H-5

ALL DIMENSIONS SHOWN ARE IN MILLIMETERS.
To convert millimeters into inches, multiply by 0.03937. To convert grams into ounces, multiply by 0.03527.

Cat. No. E256-E2-04A-X In the interest of product improvement, specifications are subject to change without notice.